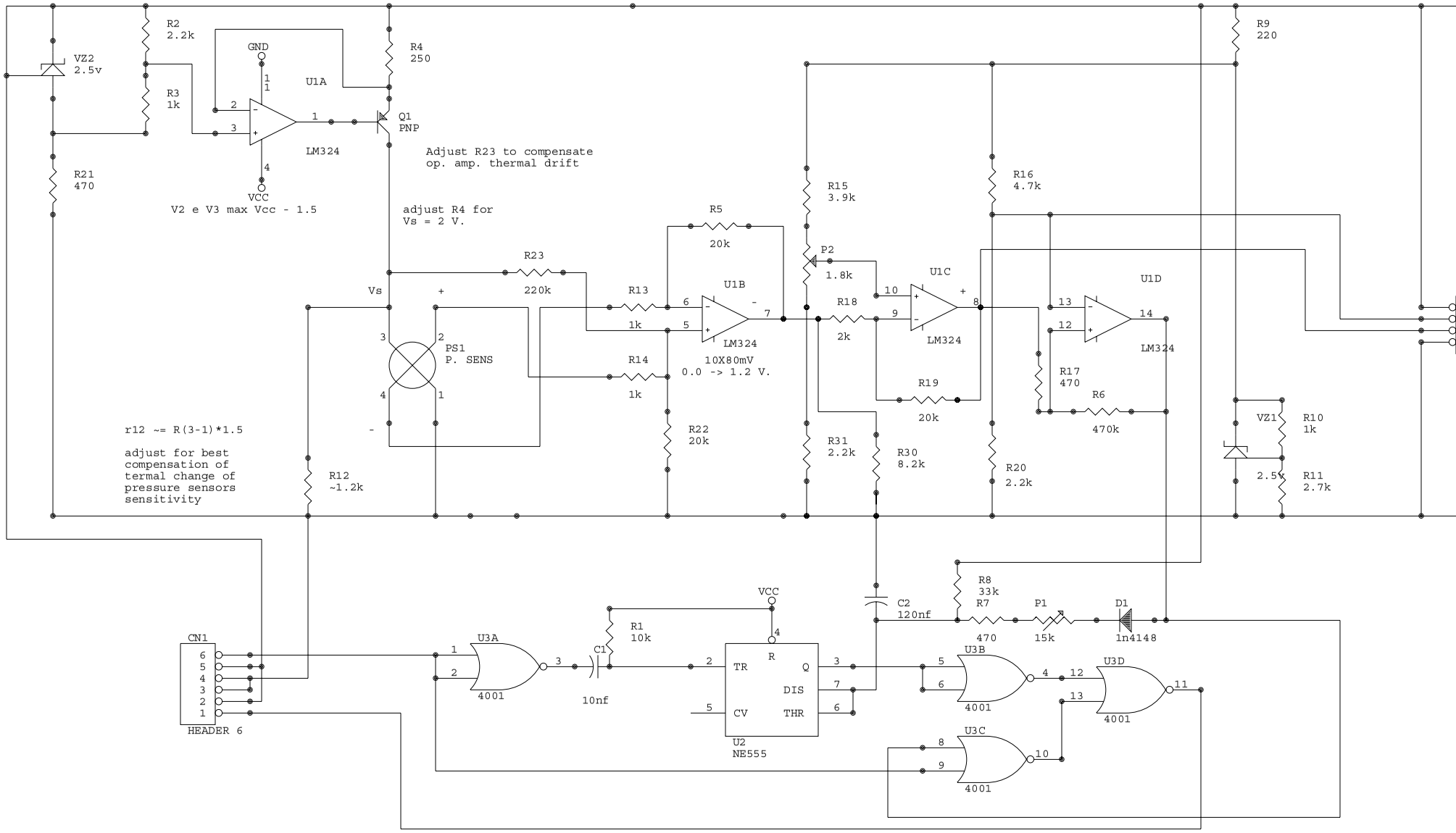

Size	Document Number	
B		
Date:	May 9, 1995	Sheet