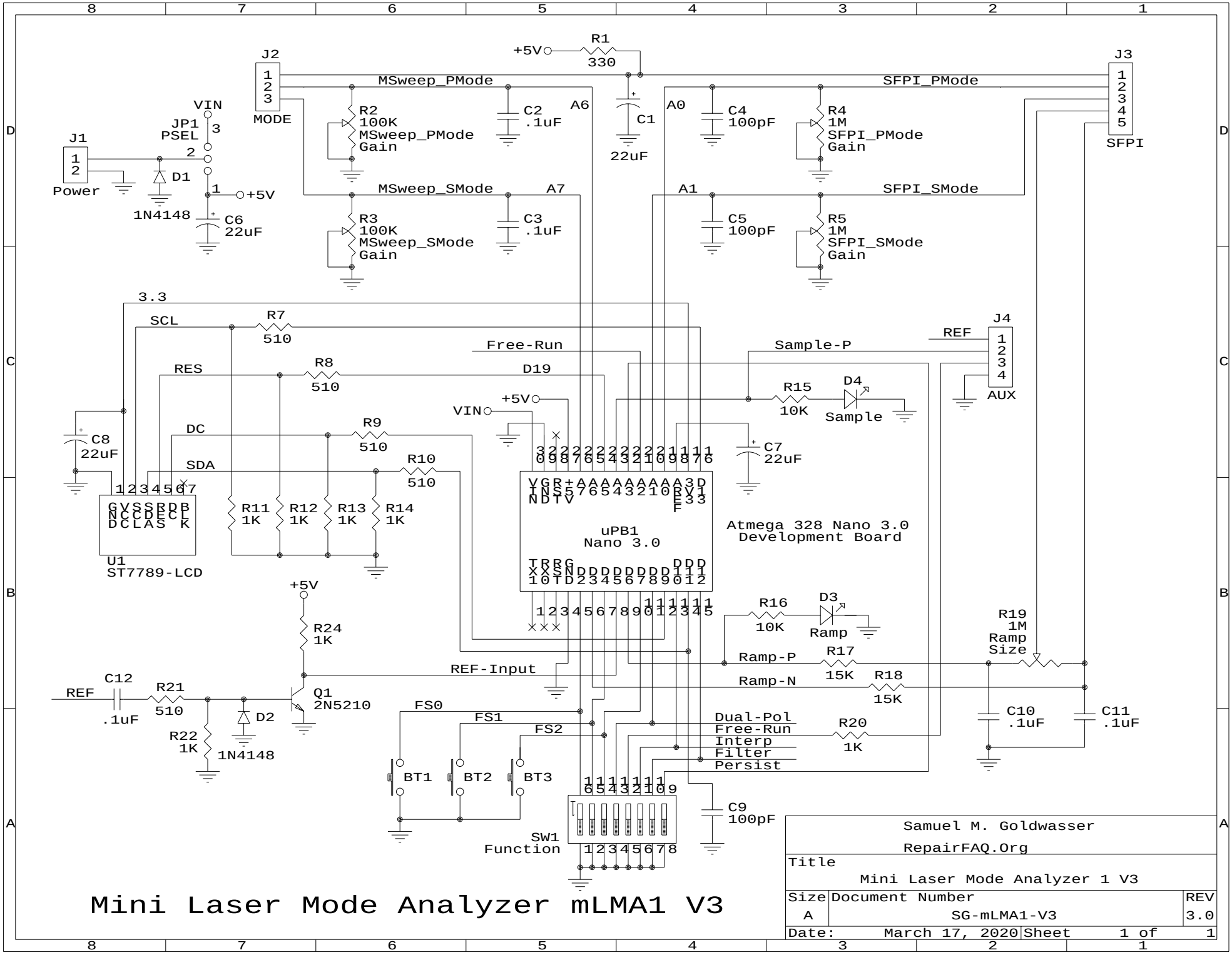
J1
Power
J2
MODE
J3
SFPI
J4
AUX
JP1
PSEL
VIN
+5V
R1
330
C1
22uF
C2
.1uF
C3
.1uF
C4
100pF
C5
100pF
C6
22uF
C7
22uF
C8
22uF
C9
100pF
C10
.1uF
C11
.1uF
C12
.1uF
D1
1N4148
D2
1N4148
D3
Ramp
D4
Sample
R2
100K
MSweep_PMode
Gain
R3
100K
MSweep_SMode
Gain
R4
1M
SFPI_PMode
Gain
R5
1M
SFPI_SMode
Gain
MSweep_PMode
MSweep_SMode
SFPI_PMode
SFPI_SMode
A6
A7
A0
A1
3.3
SCL
SDA
RES
DC
R7
510
R8
510
R9
510
R10
510
R11
1K
R12
1K
R13
1K
R14
1K
R15
10K
R16
10K
R17
15K
R18
15K
R19
1M
Ramp
Size
R20
1K
R21
510
R22
1K
R24
1K
Free-Run
D19
Sample-P
REF
REF-Input
Ramp-P
Ramp-N
Dual-Pol
Free-Run
Interp
Filter
Persist
FS0
FS1
FS2
BT1
BT2
BT3
SW1
Function
U1
ST7789-LCD
GVSSRDB
NCCDECL
DCLAS K
uPB1
Nano 3.0
VGR+AAAAAAAAA3D
INS5765432109V1
NDTV F33
TRRG DDD
XXSNDDDDDDDD111
10TD23456789012
Atmega 328 Nano 3.0
Development Board
Q1
2N5210
Samuel M. Goldwasser
RepairFAQ.Org
Title
Mini Laser Mode Analyzer 1 V3
Size
A
Document Number
SG-mLMA1-V3
REV
3.0
Date: March 17, 2020
Sheet 1 of 1
Mini Laser Mode Analyzer mLMA1 V3